Key equations for a boost converter

Now that you have an understanding of how the simple DC-DC boost converter works, we summarize the main equations for the converter here. These equations are for continuous conduction mode, where the current always flows through the inductor. Discontinuous conduction mode is out of the scope of this course.

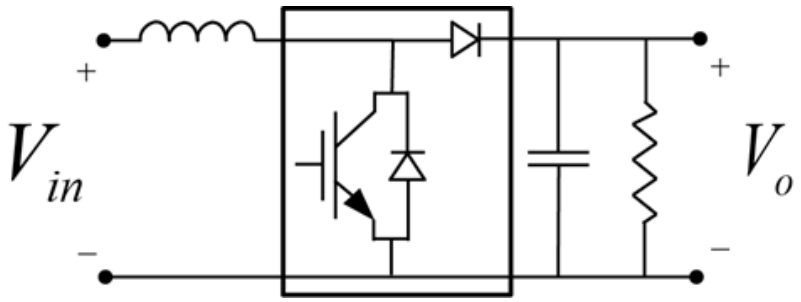

$V_0 = V_{in}/(1-D)$

$T = 1/f$

$D = T_{on}/(T)$

$T = T_{on} + T_{off}$

where

V_0 is the output voltage

D is the duty cycle of the switch

V_{in} is the input voltage

f is the switching frequency of the semiconductor switch

T is the time period of the semiconductor switch

T_{on} is the ON time of the semiconductor switch

T_{off} is the OFF time of the semiconductor switch



This course material is licensed under a Creative Commons Attibution-NonCommercial-ShareAlike 4.0 License.

DC-DC converter: driving and regenerative braking

In a battery-powered electric vehicle, regenerative braking (also called regen) is the conversion of the vehicle's kinetic energy into chemical energy stored in the battery, where it can be used later to drive the vehicle. It is braking because it also serves to slow the vehicle. It is regenerative because the energy is recaptured in the battery where it can be used again.

A torque command is derived from the position of the throttle pedal. The motor controller converts this torque command into the appropriate 3-phase voltage and current waveforms to produce the commanded torque in the motor in the most efficient way. The torque command can be positive or negative. When the torque serves to slow the vehicle then energy is returned to the battery and presto - we have regenerative braking!

So a good proportion of the energy you lose by braking is returned to the batteries and can be reused when you start off again as shown in Figure 1. In practice, regenerative brakes take time to slow cars down ands have power limitations based on the rated power of the motor, power electronics and battery. So, most vehicles that use them also have ordinary (friction) brakes working alongside. That's one reason why regenerative brakes doesn't save 100% of your braking energy.

In case of driving the vehicle forward, the opposite occurs and energy from the battery is used by the battery converter and motor drive to power the motor with a positive torque command.



This course material is licensed under a Creative Commons Attibution-NonCommercial-ShareAlike 4.0 License.

Buck and boost mode of operation for the battery DC-DC converter

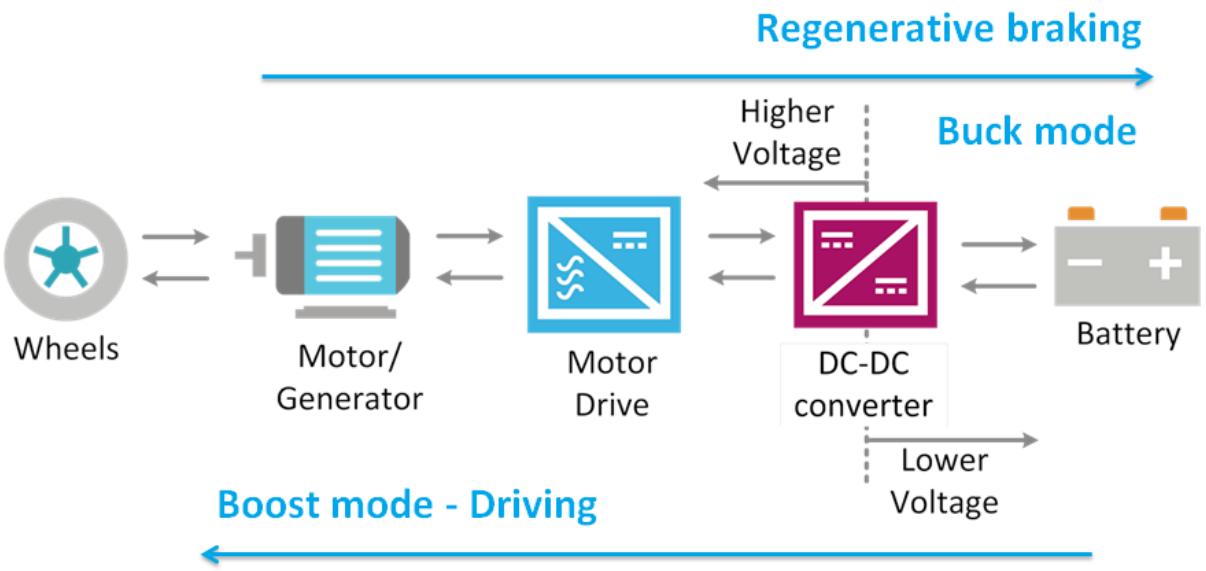

Figure 1

The most common power processing converter used for the battery converter of BEV is a buck and boost converter, shown in Figure 2. When recovering the kinetic energy from the vehicle, the device operates in buck mode, where the voltage level is decreased to a level that is within the safe voltage range of the battery as shown in Figure 1. When propelling the vehicle, the device operates in boost mode and the DC voltage is regulated to output a higher voltage level for the electric motor drive and motor. As already concluded, the DC-DC battery converter should work in two quadrants as a class C converter and the current must be able to reverse.



This course material is licensed under a Creative Commons Attibution-NonCommercial-ShareAlike 4.0 License.

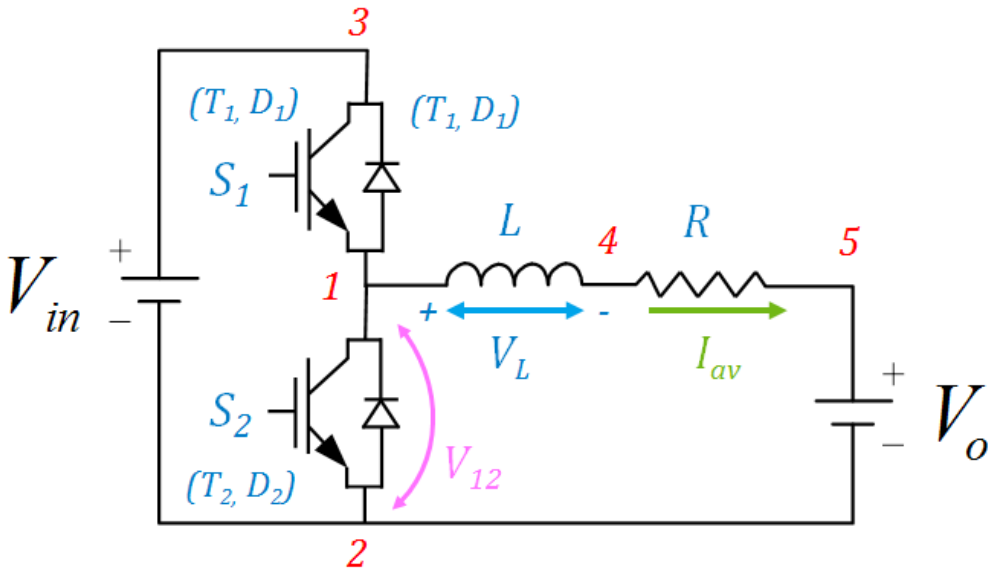

Figure 2

Semiconductor switches

That is why the switches S_1 and S_2 must allow the bidirectional flow of current through them. But electronic switches (like the IGBT T_1 and T_2 shown in Figure 2) can inherently carry current in only one direction. Therefore, in order to get bidirectionality, diodes D_1 and D_2 have to be placed in antiparallel with the respective semiconductor switches in S_1 and S_2 . The switch contacts are shown with an arrowhead to indicate the allowed direction of current flow. For example, when current flows into terminal 1, it can continue on to terminal 2 either by way of diode D_1 and source V_1 or by way of T_2, provided T_2 is closed. Similarly if current flows out of terminal 1, it can take the path through diode D_2 or the path through T_1 and V_1 , provided that T_1 is closed.

This course material is licensed under a Creative Commons Attibution-NonCommercial-ShareAlike 4.0 License.

Operation of buck and boost converter

Consider the buck and boost converter topology shown in the Figure 2 in which two switches S_1 to S_2 are connected across a dc voltage source V_{in}. The switches open and close alternately in such a way that when S_1 is closed, S_2 is open and vice versa. The time of one cycle is T, and S_1 is closed for a period T_{on}. It follows that the duty cycle of S_1 and S_2 namely D_{S1} and D_{S2} can be given by

$$D_{S1} = T_{on}/T$$
$$D_{S2} = (1-D_{S1})$$

When S_1 is closed, terminal 1 is at the level of point 3 and so the output voltage is $V_{12} = V_{in}$ for a period T_{on} as shown in Figure 3. Then, when S_1 is open, S_2 is closed and so $V_{12} = 0$ for a period T_{off}. The output voltage oscillates, therefore, between V_{in} and zero (Figure 3) and its average DC value $V_{12(avg)}$ is given by

$$V_{12(avg)} = D_{S1} V_{in}$$

By varying D_{S1} from zero to 1, we can vary the magnitude of $V_{12(avg)}$ from zero to V_{in}.



This course material is licensed under a Creative Commons Attibution-NonCommercial-ShareAlike 4.0 License.

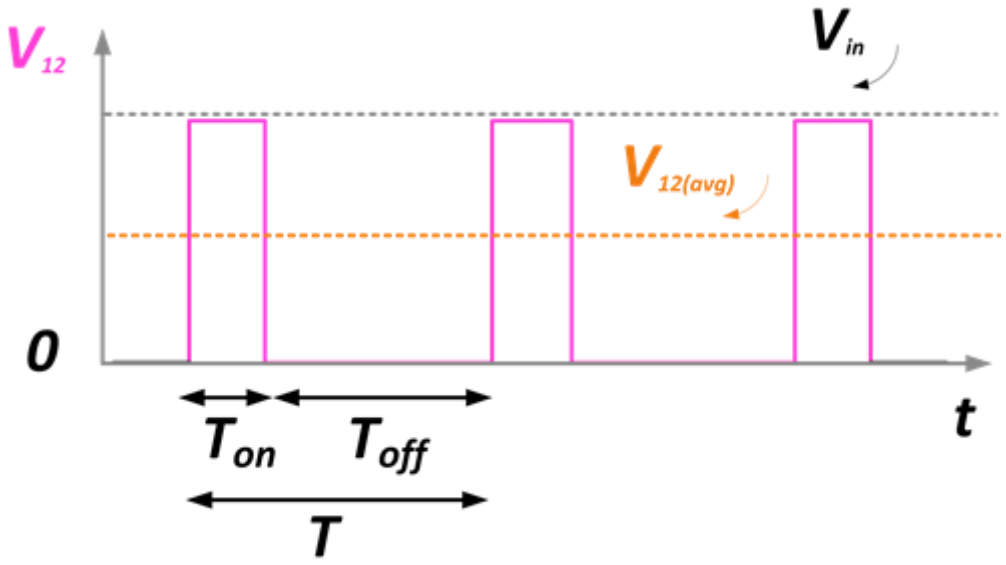

Figure 3

It is apparent that the circuit on the left-hand side of terminals 1, 2 is never open. For example, if current I_{av} happen to flow into terminal 1, it can find its way back to terminal 2 either via S_2 (if S_2 is closed) or via S_1 and source V_{in} if S_2 is open. Because one of the switches is always closed, it is evident that current I_{av} can always circulate, no matter what its direction happens to be. This is a crucially important feature of the converter. It is called a two-quadrant converter because current I_{av} can flow in either direction, but the polarity of the DC voltage V_{in} and hence the polarity of V_{12} remains fixed: Terminal 1 is always positive (+) with respect to terminal 2.

Suppose we want to transfer the power from terminals V_{12} to a load (in our case battery), whose DC voltage has a value V_0 (Figure 2). Knowing that V_{12} is fluctuating while V_2 is constant, it is essential to place a buffer between the two, otherwise



This course material is licensed under a Creative Commons Attibution-NonCommercial-ShareAlike 4.0 License.

it will result in short-circuit currents. We could place a resistor between points 1 and 5, but that would involve I^2R losses which would reduce the efficiency of the converter. The best solution is to use an inductance L as shown in Figure 2. It has the advantage of opposing AC current flow while offering no opposition to DC. We assume that the load has a small internal resistance R. In reality there is a cable between the converter and battery, which also acts provides some resistance.

Buck operation

Suppose that both the voltage source V_{in} and the duty cycle D_{S1} are fixed. Consequently, the DC component $V_{12(avg)}$ between points 1 and 2 is constant. If V_0 is exactly equal to $V_{12(avg)}$, no DC current will flow and no DC power exchange will take place. At that point,

$$V_{12(avg)} = D_{S1}V_{in} = V_0$$

For no power flow,

$$D_{S1} = V_0/V_{in}$$

But if V_0 is less than $V_{12(avg)}$, a DC current I_{av} will flow from terminal 1 into battery of voltage V_0 in Figure 2. Its magnitude is given by

$$I_{av} = (V_{12(avg)} - V_0) / R$$

$$P_0 = I_{av}V_0$$



This course material is licensed under a Creative Commons Attibution-NonCommercial-ShareAlike 4.0 License.

Path of current during ON time of S_1: V_{in}, T_1, L, R, V_0
Path of current during OFF time of S_1: D_2, L, R, V_0

Power P_o equal to $V_{12(avg)}I_{av}$ will, therefore, flow from terminals 1 toward the battery. This DC power can only come from the higher voltage source V_{in}. In this mode of operation, with V_o less than $V_{12(avg)}$, the converter acts like the step-down (buck) chopper.

Boost operation

On the other hand, if V_o is greater than $V_{12(avg)}$, a DC current Iav will flow out of terminal 5 and into terminal 1 in Figure 2. Its magnitude is

$$Iav = (V_o - V_{12(avg)})/R$$

Path of current during ON time of S_2:, V_o ,R, L, T_2
Path of current during OFF time of S_2: V_o, R, L, D_1, V_{in}

Power now flows from the low-voltage battery side V_o to the higher voltage side $V_{12(avg)}$ and subsequently to V_{in}. In this mode of operation, with V_o greater than $V_{12(avg)}$, the converter acts like a step-up (boost) chopper.

Ripple in the inductor

While a perfect DC current is required for charging or discharging the battery, this is not the case in reality. This is because a current ripple ΔI is present in the inductor current due to the energy storage in the inductor, as shown in Figure 4.



This course material is licensed under a Creative Commons Attibution-NonCommercial-ShareAlike 4.0 License.

To determine the peak-to-peak ripple ΔI, let us examine the situation when S_1 is closed and S_2 is open for the buck mode of operation (Figure 2). Assuming the current I_L is momentarily equal to its DC value of I_{av}, the voltage V_L across the inductor can be written as :

$$V_{L(on)} = V_{in} - V_0 - I_{av}R$$

where $I_{av}R$ is the voltage drop across the resistor. Since, $V_{in} > V_0$, $V_{L(on)}$ is positive and the the voltage polarity across the inductor is as shown in Figure 2. Knowing that I_L is flowing into terminal 1 to terminal 4 and that terminal 1 is (+) with respect to terminal 4, it follows that I_L must be increasing. This is because the current through the inductor increases when the voltage across it is positive. The inductor accumulates volt-seconds and during the T_{on} that S_1 is closed, the magnetic "charge" totals $V_{L(on)}T_{on}$. Therefore the current increases by an amount,

$$\Delta I = V_{L(on)}T_{on} / L$$

When S_1 is open and S_2 is closed, then the voltage across the inductor is negative (shown by the minus sign in the formula below) and the inductor current reduces,

$$V_{L(off)} = - V_0 - I_{av}R$$

$$\Delta I = V_{L(off)}T_{off} / L$$

In steady state, the rise in inductor current in the ON state of S_1 must be balanced



This course material is licensed under a Creative Commons Attibution-NonCommercial-ShareAlike 4.0 License.

by the fall in inductor current during the off state of S_1. Hence, the actual inductor current I_L varies from $(I_{av} - \Delta I/2)$ to $(I_{av} + \Delta I/2)$ as shown in Figure 4 with an average value of I_{av}. In the ideal case, $\Delta I = 0$ and this requires a large size of inductor as shown by the formula, $\Delta I = V_{L(on)} T_{on} / L$.

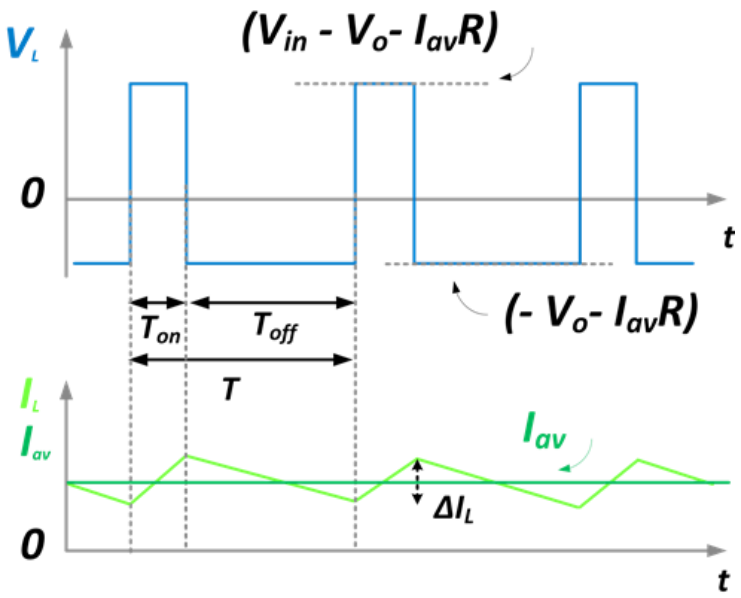

Figure 4: Buck mode of operation, where I_{av} is positive

Overview of buck and boost mode

The table on the next page shows how the operation mode of the converter changes based on the duty cycle of S_1. The switching system of the buck and boost converter is therefore able to transfer DC power in both directions-from the high-voltage side V_{in} to the low voltage side V_0 or vice versa. Again, because the current can reverse while the polarity of $V_{12(avg)}$ remains the same, this buck/boost converter operates in two quadrants.



This course material is licensed under a Creative Commons Attibution-NonCommercial-ShareAlike 4.0 License.

Mode	Duty cycle of S_1
No power flow	$D_{S1} = V_0/V_{in}$
Buck operation	$D_{S1} > V_0/V_{in}$
Boost operation	$D_{S1} < V_0/V_{in}$

To summarize the equations:

$$D_{S1} = T_{on}/T$$

$$T = T_{on} + T_{off}$$

$$D_{S2} = (1\text{-}D_{S1})$$

$$T = 1/f$$

$$V_{12(avg)} = D_{S1} V_{in}$$

$$I_{av} = (V_{12(avg)} - V_0) / R$$

$$P_0 = I_{av} V_o$$

$$\Delta I = V_{L(on)} T_{on}/L$$

$$V_{L(off)} = - V_0 - I_{av} R$$

$$\Delta I = V_{L(off)} T_{off}/L$$

where

V_0 is the output voltage

V_{in} is the input voltage

D_{S1} is the duty cycle of the switch S_1

D_{S2} is the duty cycle of the switch S_2

f is the switching frequency of the semiconductor switch

T is the time period of the semiconductor switch

T_{on} is the ON time of the semiconductor switch



This course material is licensed under a Creative Commons Attibution-NonCommercial-ShareAlike 4.0 License.

T_{off} is the OFF time of the semiconductor switch

$V_{12(avg)}$ is the average voltage across the switch S_2

I_{av} is the average current through the inductor, sign of I_{av} determines direction of power flow

R is the resistance of the inductor

P_0 is the power delivered to the output voltage V_o

Electromagnetic compatibility (EMC)

Electromagnetic compatibility (EMC) defines an electrical systems' ability to remain neutral in the vicinity of other systems. In automotive systems, all electrical equipment must be able to function in close proximity to each other without producing emissions that directly or indirectly degrade the performance of other equipment. Modern vehicles have numerous electronic systems, including electronic ignition, electronic fuel injection, ABS, airbags, radio, car phone and navigation systems. The introduction of high voltage electric machines and high frequency switching controllers will raise further EMC problems for vehicle manufacturers.



This course material is licensed under a Creative Commons Attibution-NonCommercial-ShareAlike 4.0 License.